ALE106.0105.01

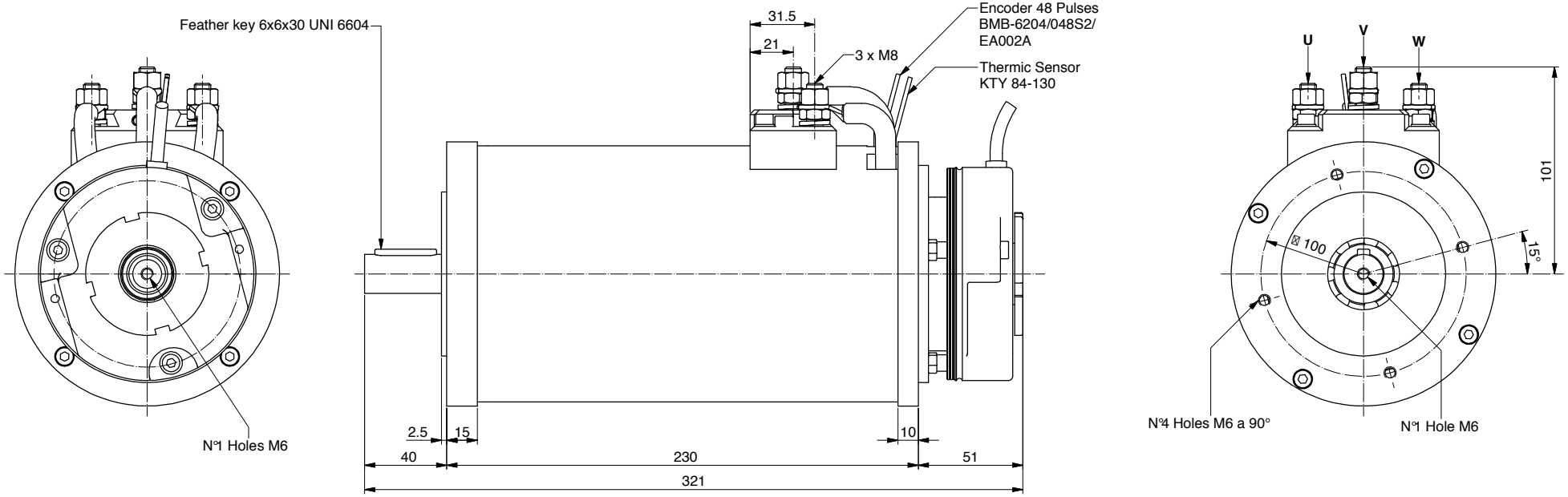

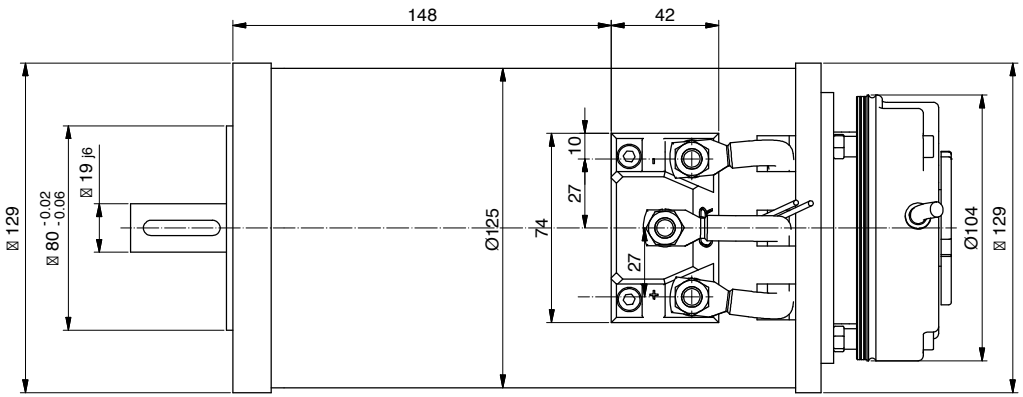

Power	1000 W
Tension	48 V
Speed	2500 Rpm
Torque	3.8 Nm
Enclosure	IP 23