# AL173.P0001

ALPATEK
BATTERY DRIVE SYSTEMS AND MOTORS

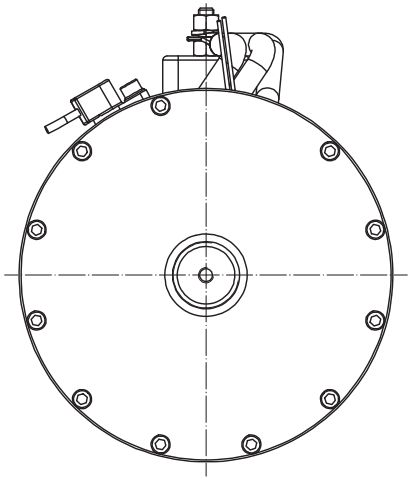

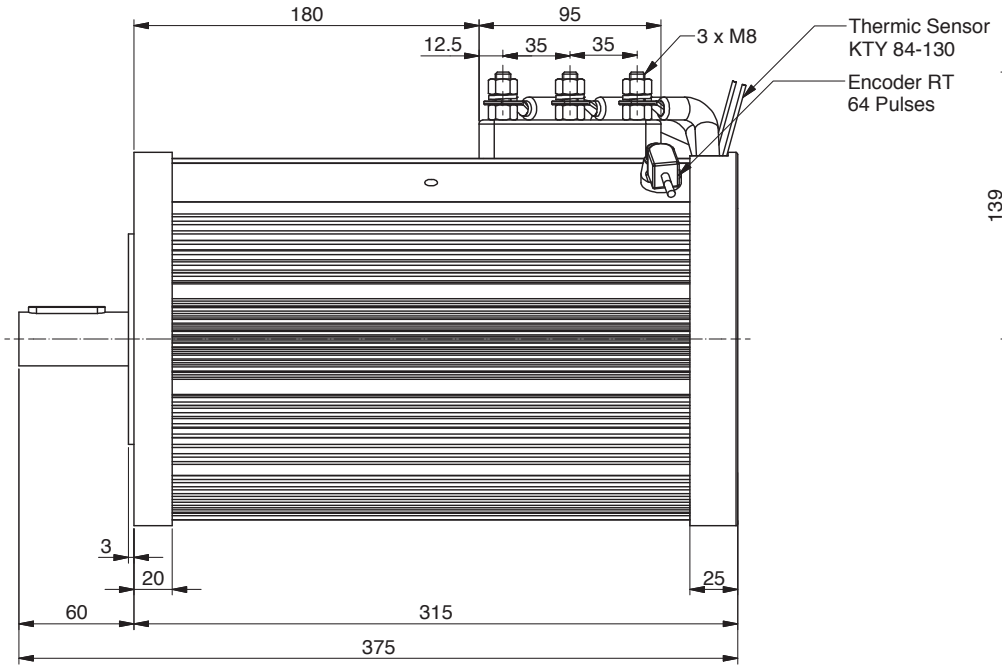


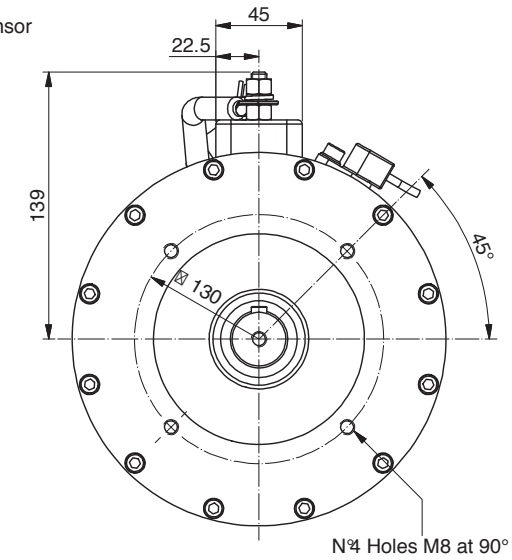


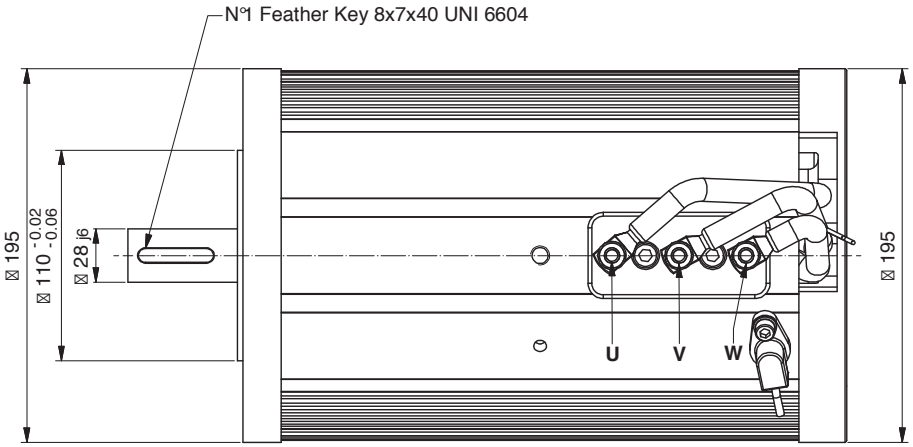


| | |
|---|---|
| Power | 4000 W |
| Tension | 48 V |
| Speed | 2500 Rpm |
| Torque | 15.2 Nm |
| Enclosure | IP 20 |